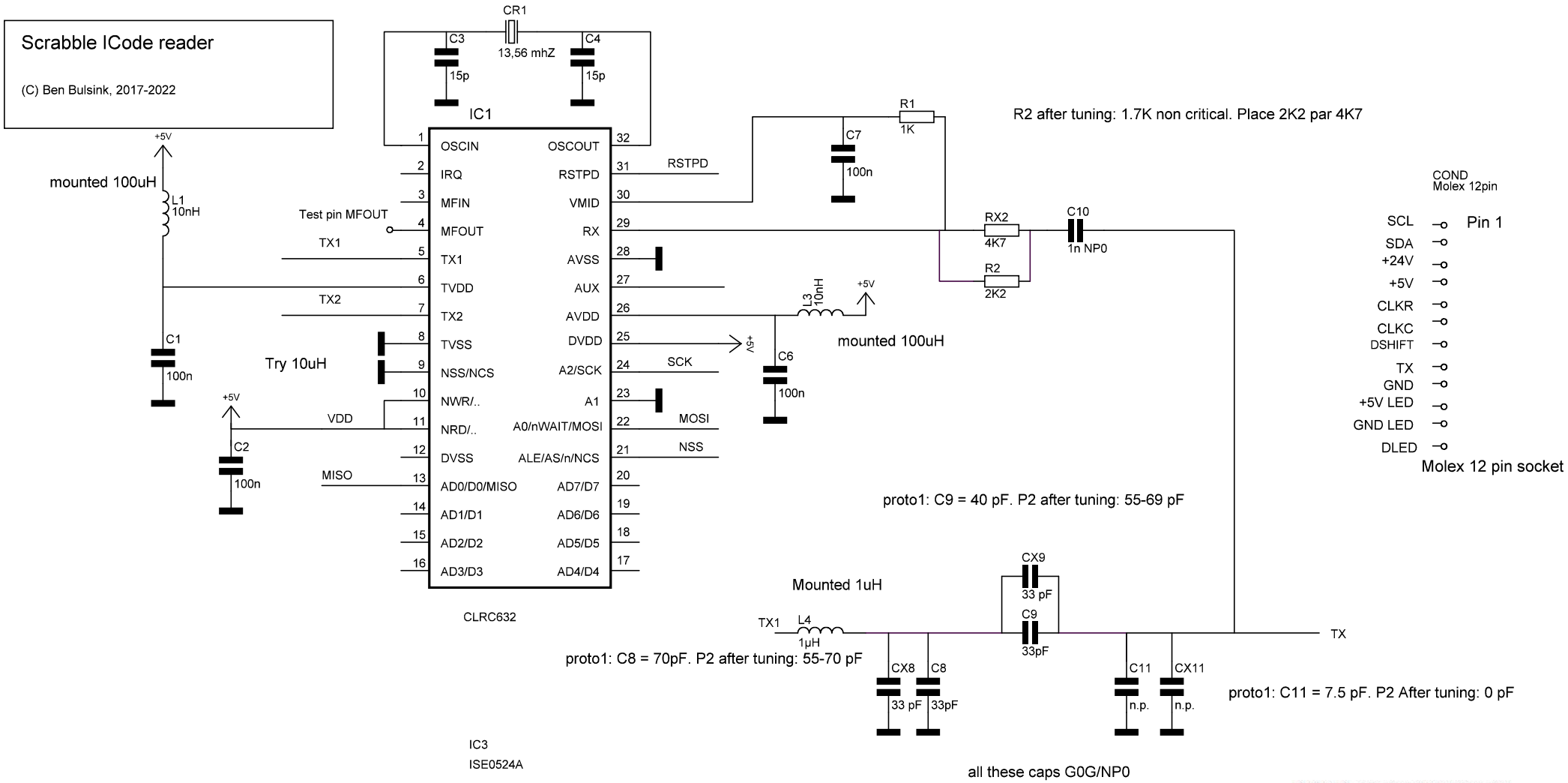
Scrabble ICode reader
(C) Ben Bulsink, 2017-2022
CR1
13,56 mhZ
C3
15p
C4
15p
IC1
OSCIN
IRQ
MFIN
MFOUT
TX1
TVDD
TX2
TVSS
NSS/NCS
NWR/..
NRD/..
DVSS
AD0/D0/MISO
AD1/D1
AD2/D2
AD3/D3
OSCOUT
RSTPD
VMID
RX
AVSS
AUX
AVDD
DVDD
A2/SCK
A1
A0/nWAIT/MOSI
ALE/AS/n/NCS
AD7/D7
AD6/D6
AD5/D5
AD4/D4
CLRC632
+5V
mounted 100uH
L1
10nH
C1
100n
Test pin MFOUT
TX1
TX2
Try 10uH
VDD
C2
100n
MISO
RSTPD
SCK
MOSI
NSS
R1
1K
C7
100n
R2 after tuning: 1.7K non critical. Place 2K2 par 4K7
RX2
4K7
R2
2K2
C10
1n NP0
L3
10nH
mounted 100uH
C6
100n
COND
Molex 12pin
SCL
SDA
+24V
+5V
CLKR
CLKC
DSHIFT
TX
GND
+5V LED
GND LED
DLED
Pin 1
Molex 12 pin socket
proto1: C9 = 40 pF. P2 after tuning: 55-69 pF
Mounted 1uH
TX1
L4
1µH
CX9
33 pF
C9
33pF
TX
proto1: C8 = 70pF. P2 after tuning: 55-70 pF
CX8
33 pF
C8
33pF
C11
n.p.
CX11
n.p.
proto1: C11 = 7.5 pF. P2 After tuning: 0 pF
all these caps G0G/NP0
IC3
ISE0524A
GND
n.c.
+Vin
0V
+Vout
24V
CX1
?
C5
100n
5V-24V DCDC
ISE0524A
Metal color var cap: 2.8 - 27 pF
Orange color var cap: 3 - 80 pF
Executed tuning procedure:
Mount variable resistor on RX2, R2 unplaced
Mount 80pF var cap on CX8 and 33 pf on C8
Mount 28pF var cap on CX9 and 15 pF on C9
Mount 28pF var cap on CX11 and C11 unplaced.
place all 100 tags of a set on the board. Take care
to fill 3 adjacent horizontal and vertical lines with 15 tags.
See right picture as example.
Now sequential tune the four trimmers to get a stable reading.
Also check correct rack readings
D O G D J U R I S X M V I R M
E A H E D T B B V D E A E I A
N S G T A C A N I Y U R O I G
. . . . . R L K
. . . . . O . E I N
. . . . . L . . C T A
. . . . . Q S A
. . . . . N S T
. . . . . I H E
. . . . . N L O
E . . . . . O Z T
R R . . . . . O E W
T Y F . . . . . U L ?
O A ? P . . . . . E I E
I N F P A . . . . . E U W